НАНОЭЛЕКТРОНИКС
ISO9001 www.nanoelec.ru

# TERMINAL BLOCK Connector

KLS electronic
www.cnkls.com

II

## PCB Series

KLS2-128IA-5.00/5.08 Series Pitch=5.00mm/5.08mm

### Electrical :

Rated voltage: 300V
Rated current: 10A
Contact resistance: 20mΩ
Insulation resistance: 5000MΩ/1000V
Withstanding Voltage: AC2000V/1Min
Wire range: 24-12AWG 2.5mm²

### Material

Screws: M2.5 steel Zinc plated
Contact:Brass, Ni plated
Pin header: Brass, Tin plated
Housing: PA66, UL94V-0

### Mechanical

Temp. Range:-40°C~+105°C
MAX Soldering: +250°C for 5 Sec.
Torque: 0.4Nm (3.6 lb.in)
Strip length: 6-7mm

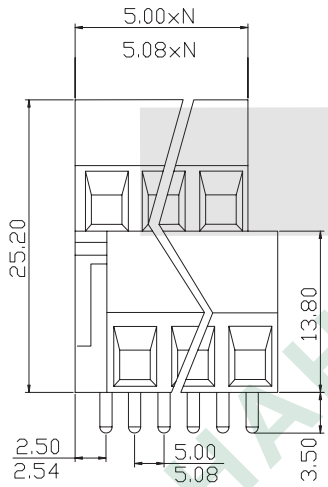


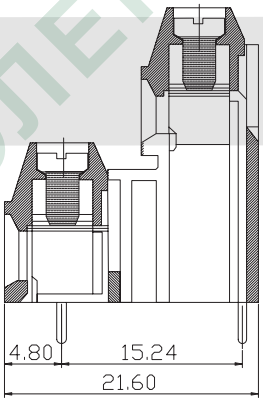


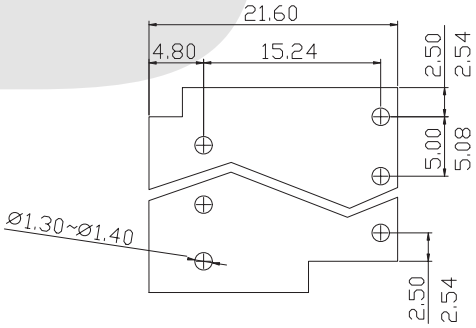


## ORDER INFORMATION

Product NO.: KLS2-128IA-5.00-XXP X X X

- Pos. NO.
- Series No.
- Pitch: 5.00=5.00mm 5.08=5.08mm 10.00=10.00mm 10.16=10.16mm
- Number of Pole
- Customer Request
- Screw: C=Cross Screw S=Slot Screw
- Color: 1=Gray 2=Blue 3=Black 4=Green 5=Orange 6=Red 7=Transparent 8=Yellow 9=White

All specification & dimensions are subject to change,please call your nearest KLS sales represesntative for update information