Switch

KLS electronic
www.cnkls.com

VII

Slide Switch Series

KLS7-SK01-12D02 (1P2T) Slide Switch Series

SPECIFICATIONS

Rating: 0. 3A 50VDC
Contact Resistance: 30mΩ Max
Insulation Resistance:500VDC 100MΩ Min
Dielectric Strength:500V AC 1 Minute
Operating Force:100gf~800gf
Electrical Life :10,000 cycles

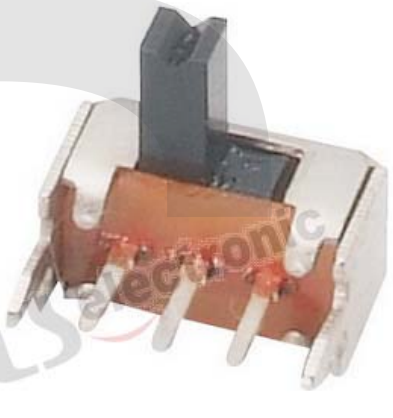

L=2 · 5

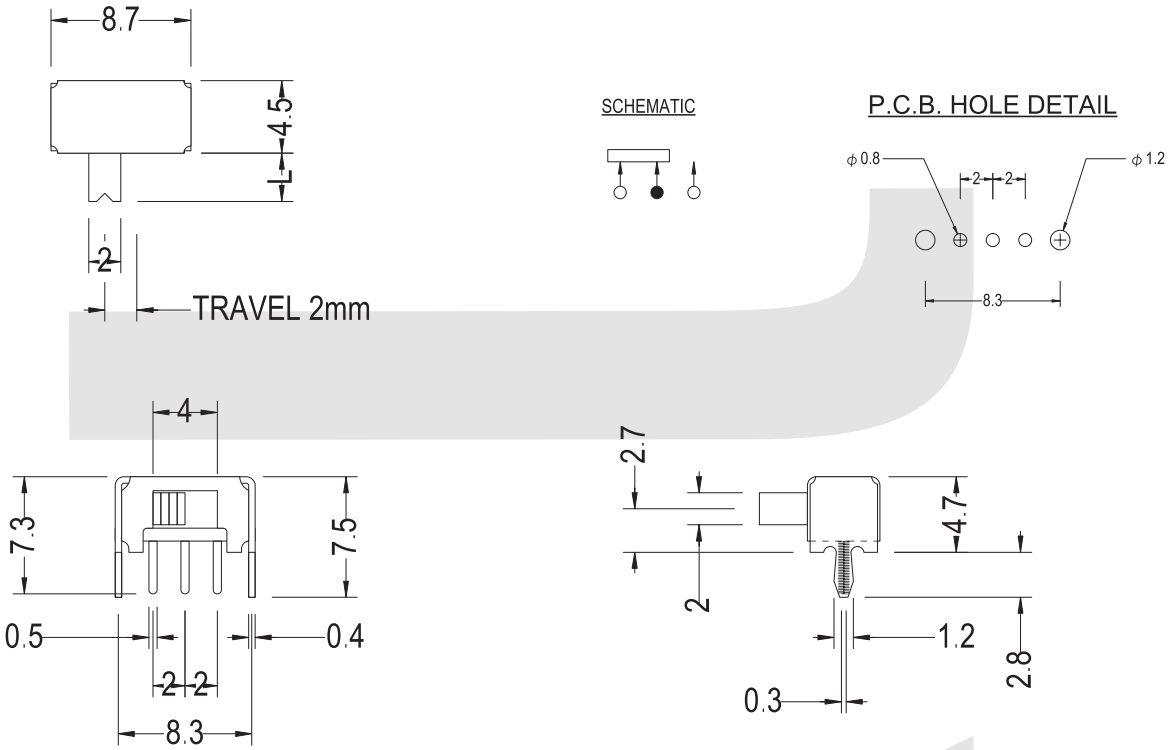

ORDER INFORMATION

KLS7-SK01 - 1 2 D 02 - X X - X

- Part Number
- Slide Switch Type
- Pole
- Throw
- Travelling
- Sequential No.
- Knobe Height
- Operating Force
- Knob Type

Travelling					
C	D	E	F	G	H
1. 5	2. 0	2. 5	3. 0	3. 5	4. 0
I	J	K	L	N	P
4. 5	5. 0	5. 5	6. 0	7. 0	8. 0

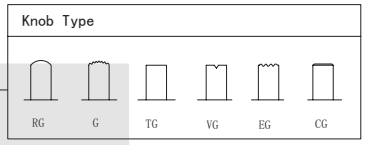

All specification & dimensions are subject to change,please call your nearest KLS sales represesntative for update information

Slide Switch Series

KLS7-SK02-12E12 (1P2T) Slide Switch Series

SPECIFICATIONS

Rating: 0. 5A 50VDC
Contact Resistance: 30mΩ Max
Insulation Resistance:500VDC 100MΩ Min
Dielectric Strength:500V AC 1 Minute
Operating Force:100gf~800gf
Electrical Life :10,000 cycles

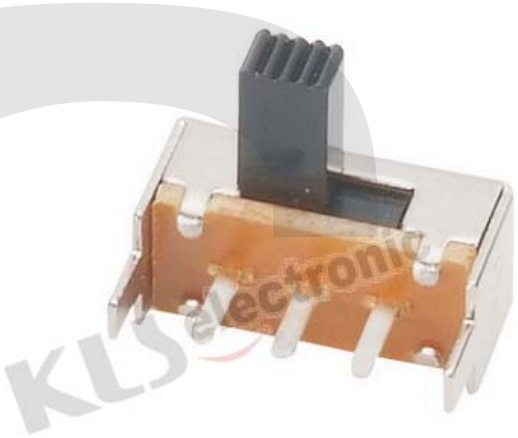

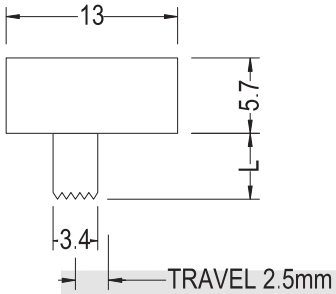

SCHEMATIC

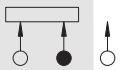

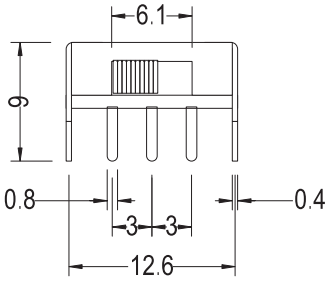

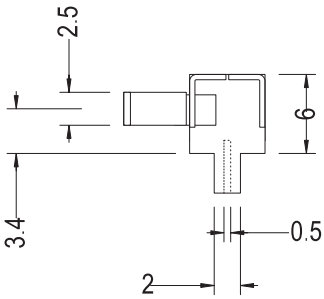

P.C.B. HOLE DETAIL

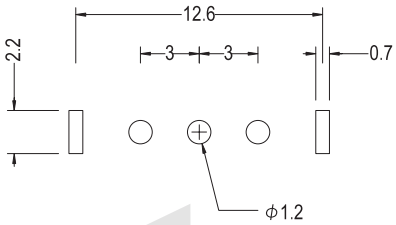

ORDER INFORMATION

KLS7-SK02 - 1 2 E 12 - X X - X

- Part Number
- Slide Switch Type
- Pole
- Throw
- Travelling
- Sequential No.
- Knobe Height
- Operating Force

Travelling					
C	D	E	F	G	H
1. 5	2. 0	2. 5	3. 0	3. 5	4. 0
I	J	K	L	N	P
4. 5	5. 0	5. 5	6. 0	7. 0	8. 0

Knob Type

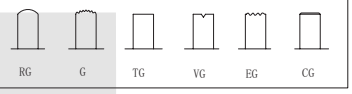

KLS electronic
www.cnkls.com

Slide Switch Series

KLS7-SS01-12E09 (1P2T) Slide Switch Series

SPECIFICATIONS

Rating: 0.3A 50VDC
Contact Resistance: 50MΩ max
Insulation Resistance:500VDC 100MΩ Min
Dielectric Strength:100V AC 1 Minute
Operating Force:100gf~800gf
Electrical Life :10,000 cycles

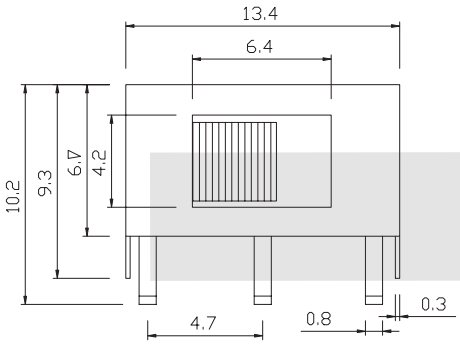

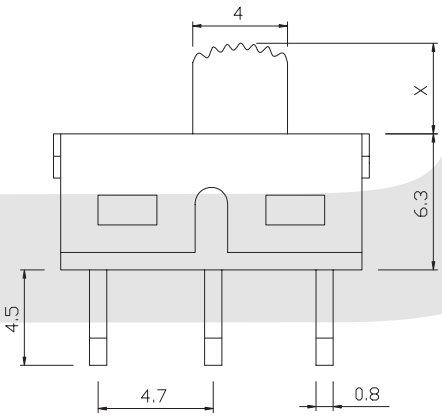

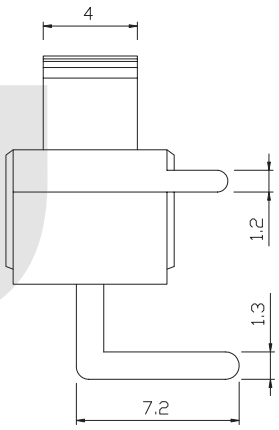

ORDER INFORMATION

KLS7-SS01 - 1 2 E 09 - X X - X

- Part Number
- Slide Switch Type
- Pole
- Throw
- Travelling
- Sequential No.
- Knobe Height
- Operating Force

Travelling					
C	D	E	F	G	H
1.5	2.0	2.5	3.0	3.5	4.0
I	J	K	L	N	P
4.5	5.0	5.5	6.0	7.0	8.0

Knob Type

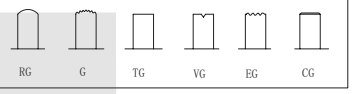

KLS electronic
www.cnkls.com

Slide Switch Series

KLS7-SS01-12E10 (1P2T) Slide Switch Series

SPECIFICATIONS

Rating: 0.3A 50VDC
Contact Resistance: 50MΩ max
Insulation Resistance:500VDC 100MΩ Min
Dielectric Strength:100V AC 1 Minute
Operating Force:100gf~800gf
Electrical Life :10,000 cycles

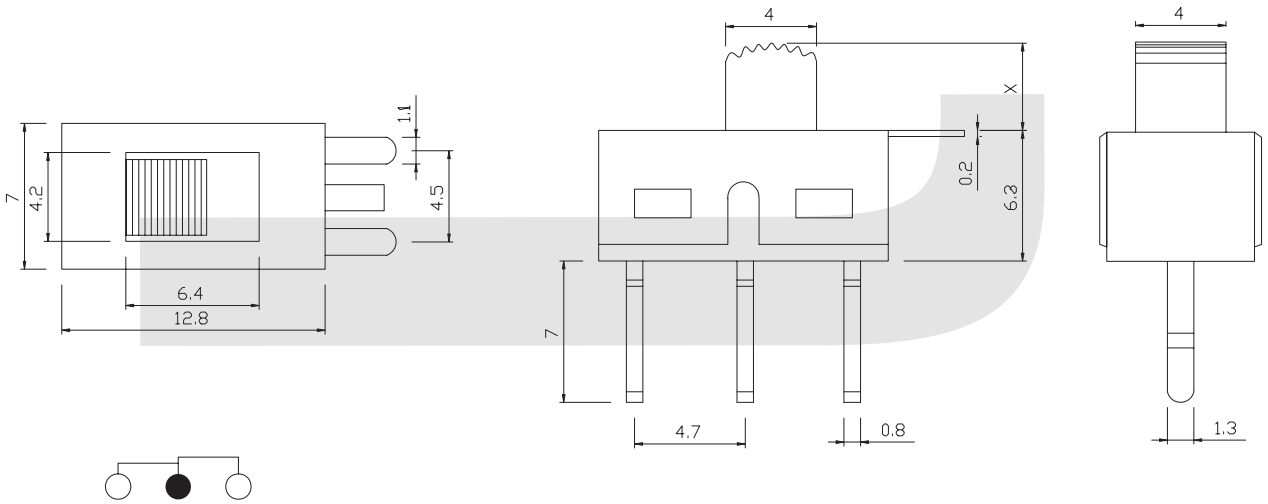

ORDER INFORMATION

KLS7-SS01 - 1 2 E 10 - X X - X

- Part Number
- Slide Switch Type
- Pole
- Throw
- Travelling
- Sequential No.
- Knobe Height
- Operating Force

Travelling					
C	D	E	F	G	H
1.5	2.0	2.5	3.0	3.5	4.0
I	J	K	L	N	P
4.5	5.0	5.5	6.0	7.0	8.0

Knob Type

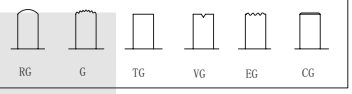

KLS electronic
www.cnkls.com

Slide Switch Series

KLS7-SS01-12E13 (1P2T) Slide Switch Series

SPECIFICATIONS

Rating: 0.3A 50VDC
Contact Resistance: 50MΩ max
Insulation Resistance:500VDC 100MΩ Min
Dielectric Strength:100V AC 1 Minute
Operating Force:100gf~800gf
Electrical Life :10,000 cycles

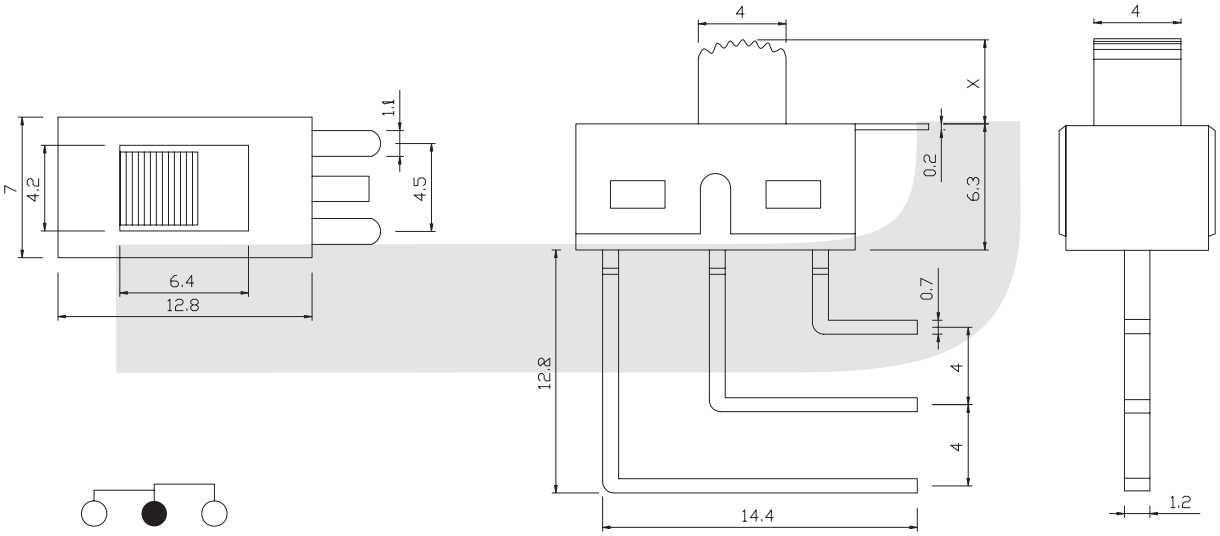

ORDER INFORMATION

KLS7-SS01 - 1 2 E 13 - X X - X

Part Number
Slide Switch Type
Pole
Throw
Travelling

C	D	E	F	G	H
1. 5	2. 0	2. 5	3. 0	3. 5	4. 0
I	J	K	L	N	P
4. 5	5. 0	5. 5	6. 0	7. 0	8. 0

Sequential No.
Knobe Height
Operating Force

Knob Type

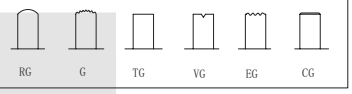

Slide Switch Series

KLS7-SS02-12F16 (1P2T) Slide Switch Series

SPECIFICATIONS

Rating: 0.5A 50VDC
Contact Resistance: 50MΩ max
Insulation Resistance:500VDC 100MΩ Min
Dielectric Strength:100V AC 1 Minute
Operating Force:100gf~800gf
Electrical Life :10,000 cycles

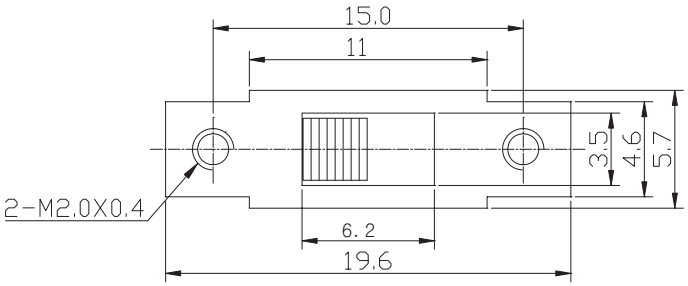

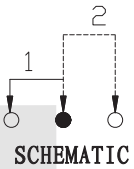

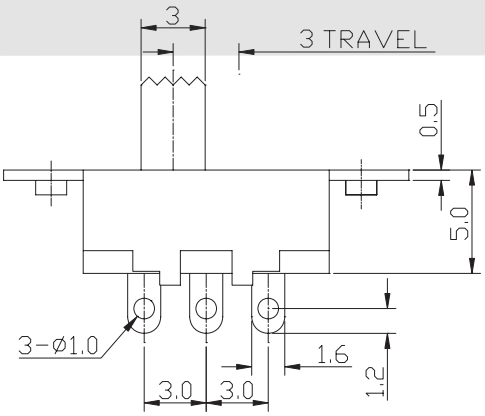

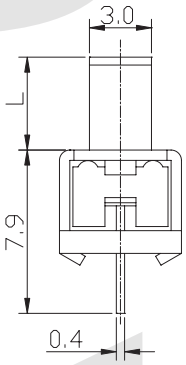

ORDER INFORMATION

KLS7-SS02 - 1 2 F 16 - X X - X

- Part Number
- Slide Switch Type
- Pole
- Throw
- Travelling
- Sequential No.
- Knobe Height
- Operating Force

Travelling					
C	D	E	F	G	H
1.5	2.0	2.5	3.0	3.5	4.0
I	J	K	L	N	P
4.5	5.0	5.5	6.0	7.0	8.0

Knob Type

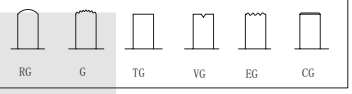

KLS electronic
www.cnkls.com

Slide Switch Series

KLS7-SS02-12F20 (1P2T) Slide Switch Series

SPECIFICATIONS

Rating: 0.5A 50VDC
Contact Resistance: 50MΩ max
Insulation Resistance:500VDC 100MΩ Min
Dielectric Strength:100V AC 1 Minute
Operating Force:100gf~800gf
Electrical Life :10,000 cycles

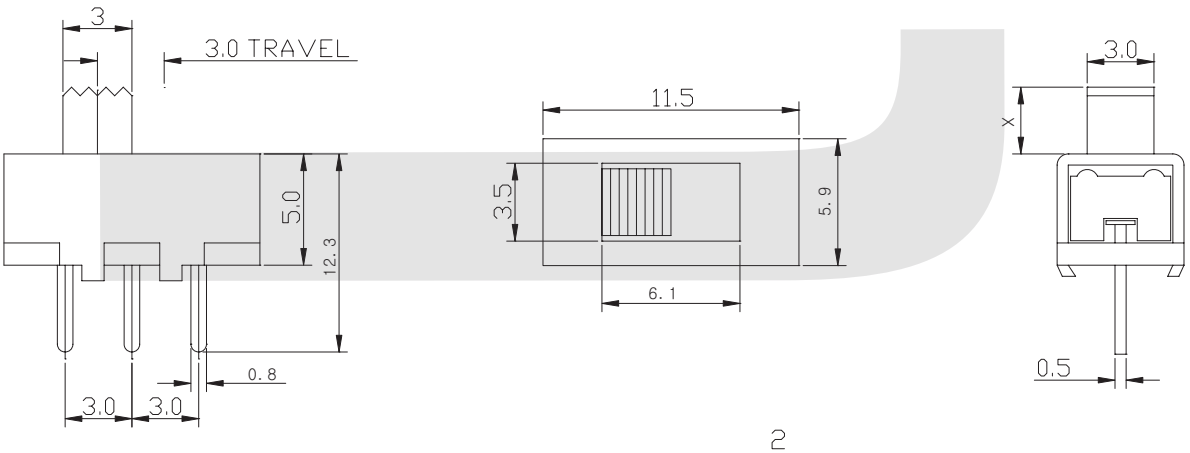

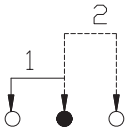

SCHEMATIC

ORDER INFORMATION

KLS7-SS02 - 1 2 F 20 - X X - X

Part Number
Slide Switch Type
Pole
Throw
Operating Force
Knobe Height
Sequential No.

Travelling					
C	D	E	F	G	H
1.5	2.0	2.5	3.0	3.5	4.0
I	J	K	L	N	P
4.5	5.0	5.5	6.0	7.0	8.0

Knob Type

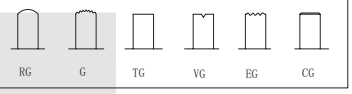

Slide Switch Series

KLS7-SS02-12F55 (1P2T) Slide Switch Series

SPECIFICATIONS

Rating: 0.5A 50VDC
Contact Resistance: 50MΩ max
Insulation Resistance:500VDC 100MΩ Min
Dielectric Strength:100V AC 1 Minute
Operating Force:100gf~800gf
Electrical Life :10,000 cycles

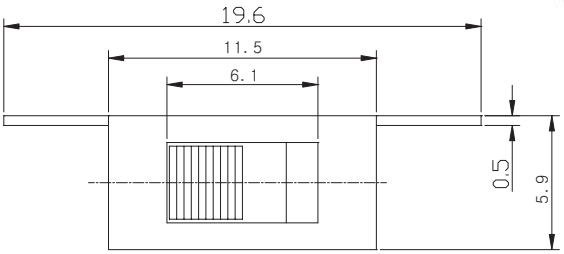

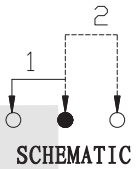

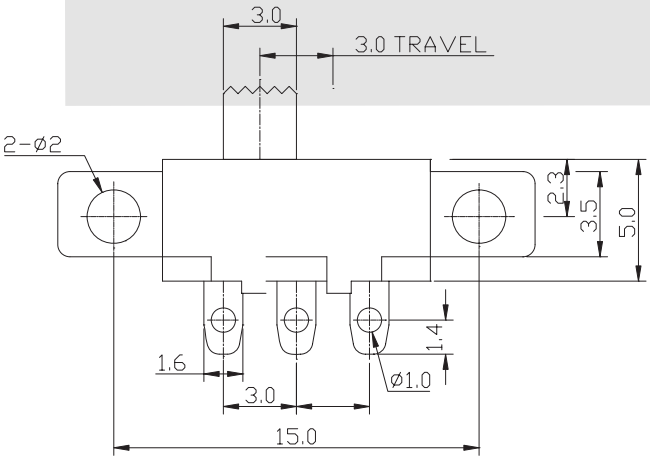

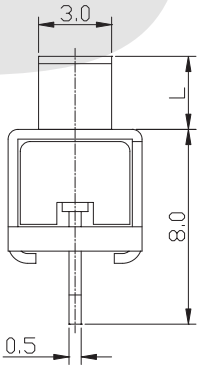

ORDER INFORMATION

KLS7-SS02 - 1 2 F 55 - X X - X

- Part Number
- Slide Switch Type
- Pole
- Throw
- Sequential No.
- Knobe Height
- Operating Force

Travelling					
C	D	E	F	G	H
1.5	2.0	2.5	3.0	3.5	4.0
I	J	K	L	N	P
4.5	5.0	5.5	6.0	7.0	8.0

Knob Type

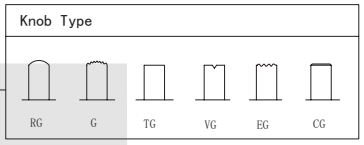

KLS electronic
www.cnkls.com

Slide Switch Series

KLS7-SS03-12D01 (1P2T) Slide Switch Series

SPECIFICATIONS

Rating: 0.3A 50VDC
Contact Resistance: 50MΩ max
Insulation Resistance:500VDC 100MΩ Min
Dielectric Strength:100V AC 1 Minute
Operating Force:100gf~800gf
Electrical Life :10,000 cycles

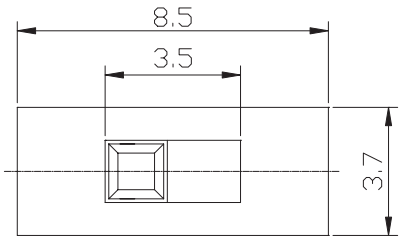

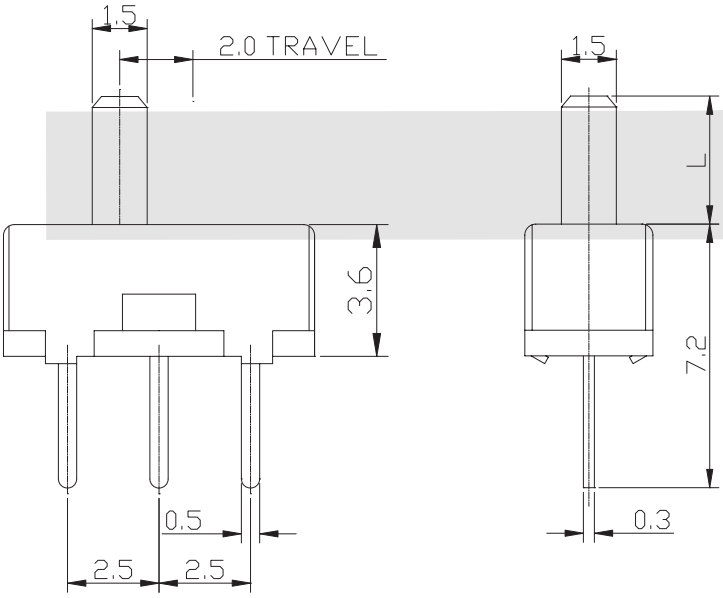

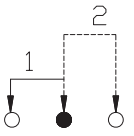

SCHEMATIC

ORDER INFORMATION

KLS7-SS03 - 1 2 D 01 - X X - X

- Part Number
- Slide Switch Type
- Pole
- Throw
- Sequential No.
- Knobe Height
- Operating Force

Travelling					
C	D	E	F	G	H
1.5	2.0	2.5	3.0	3.5	4.0
I	J	K	L	N	P
4.5	5.0	5.5	6.0	7.0	8.0

Knob Type

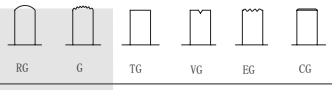

All specification & dimensions are subject to change,please call your nearest KLS sales represesntative for update information

KLS electronic
www.cnkls.com

Slide Switch Series

KLS7-SS03-12D02 (1P2T) Slide Switch Series

SPECIFICATIONS

Rating: 0.3A 50VDC
Contact Resistance: 50MΩ max
Insulation Resistance:500VDC 100MΩ Min
Dielectric Strength:100V AC 1 Minute
Operating Force:100gf~800gf
Electrical Life :10,000 cycles

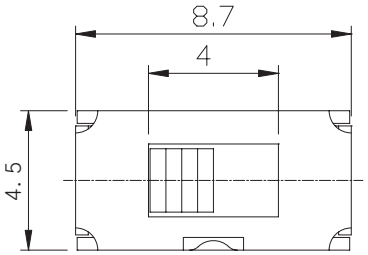

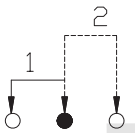

SCHEMATIC

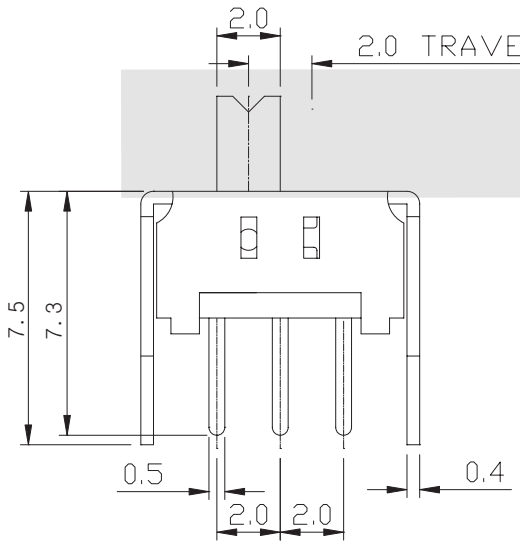

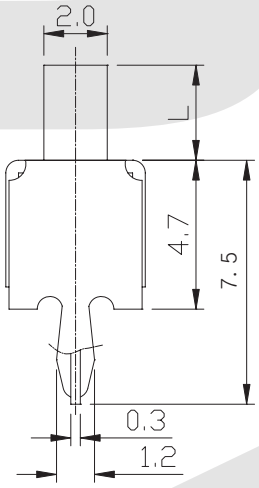

ORDER INFORMATION

KLS7-SS03 - 1 2 D 02 - X X - X

- Part Number
- Slide Switch Type
- Pole
- Throw
- Sequential No.
- Knobe Height
- Operating Force

Travelling					
C	D	E	F	G	H
1.5	2.0	2.5	3.0	3.5	4.0
I	J	K	L	N	P
4.5	5.0	5.5	6.0	7.0	8.0

Knob Type

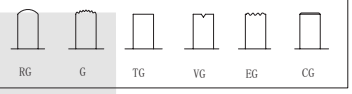

KLS electronic
www.cnkls.com

Slide Switch Series

KLS7-SS04-12F23 (1P2T) Slide Switch Series

SPECIFICATIONS

Rating: 0.5A 50VDC
Contact Resistance: 50MΩ max
Insulation Resistance:500VDC 100MΩ Min
Dielectric Strength:100V AC 1 Minute
Operating Force:100gf~800gf
Electrical Life :10,000 cycles

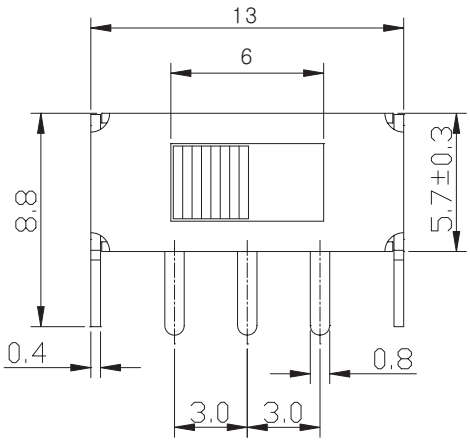

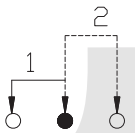

SCHEMATIC

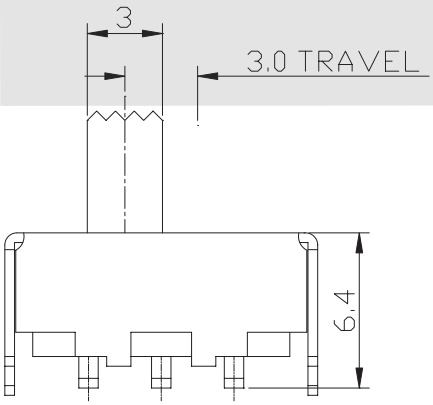

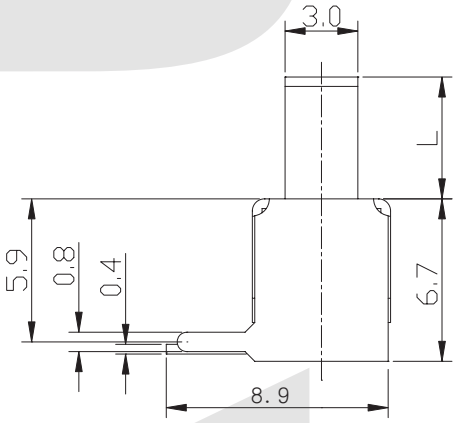

ORDER INFORMATION

KLS7-SS04 - 1 2 F 23 - X X - X

- Part Number
- Slide Switch Type
- Pole
- Throw
- Operating Force
- Knobe Height
- Sequential No.

Travelling					
C	D	E	F	G	H
1.5	2.0	2.5	3.0	3.5	4.0
I	J	K	L	N	P
4.5	5.0	5.5	6.0	7.0	8.0

Knob Type

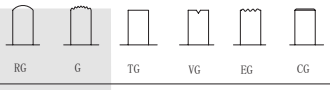

Slide Switch Series

KLS7-SS05-12G13 (1P2T) Slide Switch Series

SPECIFICATIONS

Rating: 0.5A 50VDC
Contact Resistance: 50MΩ max
Insulation Resistance:500VDC 100MΩ Min
Dielectric Strength:100V AC 1 Minute
Operating Force:100gf~800gf
Electrical Life :10,000 cycles

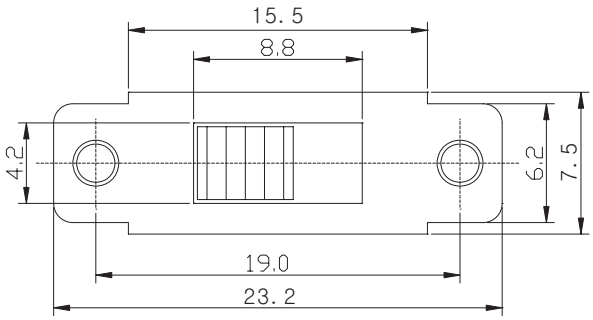

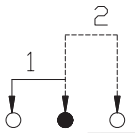

SCHEMATIC

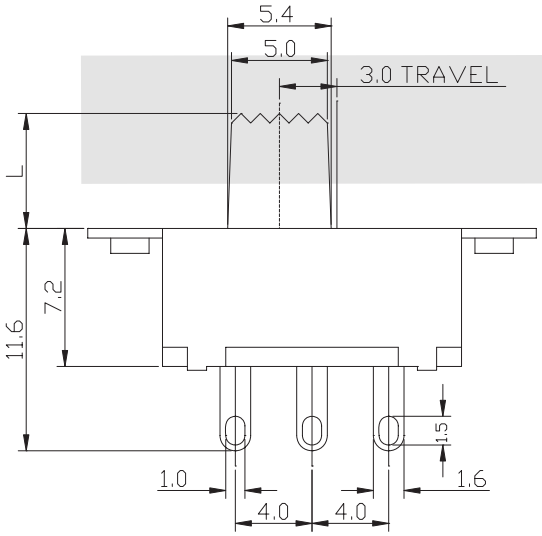

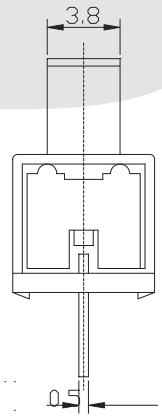

ORDER INFORMATION

KLS7-SS05 - 1 2 G 13 - X X - X

- Part Number
- Slide Switch Type
- Pole
- Throw
- Sequential No.
- Knobe Height
- Operating Force

Travelling					
C	D	E	F	G	H
1. 5	2. 0	2. 5	3. 0	3. 5	4. 0
I	J	K	L	N	P
4. 5	5. 0	5. 5	6. 0	7. 0	8. 0

Knob Type

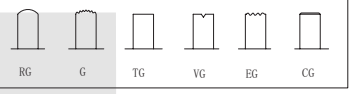

KLS electronic
www.cnkls.com

Slide Switch Series

KLS7-SS06-12F41 (1P2T) Slide Switch Series

SPECIFICATIONS

Rating: 0.5A 50VDC
Contact Resistance: 50MΩ max
Insulation Resistance:500VDC 100MΩ Min
Dielectric Strength:100V AC 1 Minute
Operating Force:100gf~800gf
Electrical Life :10,000 cycles

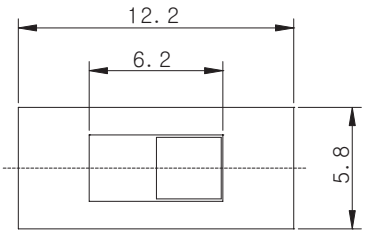

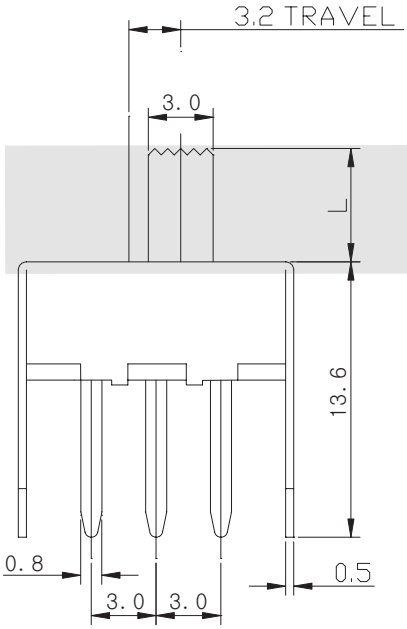

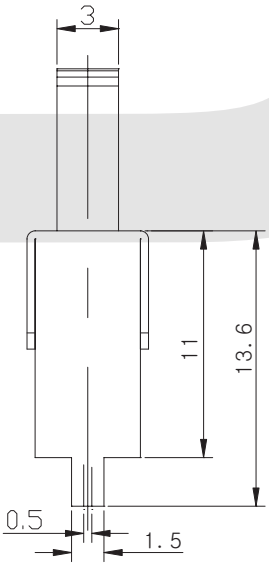

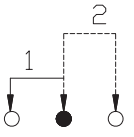

SCHEMATIC

ORDER INFORMATION

KLS7-SS06 - 1 2 F 41 - X X - X

- Part Number
- Slide Switch Type
- Pole
- Throw
- Sequential No.
- Knobe Height
- Operating Force

Travelling					
C	D	E	F	G	H
1.5	2.0	2.5	3.0	3.5	4.0
I	J	K	L	N	P
4.5	5.0	5.5	6.0	7.0	8.0

Knob Type

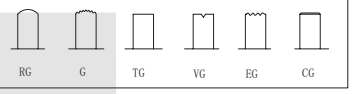

Slide Switch Series

KLS7-SS07-12F02 (1P2T) Slide Switch Series

SPECIFICATIONS

Rating: 0.5A 50VDC
Contact Resistance: 50MΩ max
Insulation Resistance:500VDC 100MΩ Min
Dielectric Strength:100V AC 1 Minute
Operating Force:100gf~800gf
Electrical Life :10,000 cycles

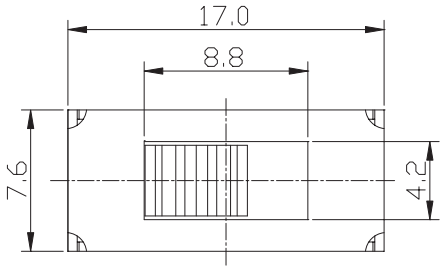

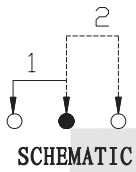

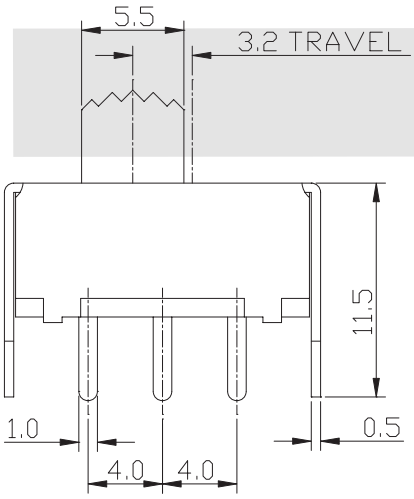

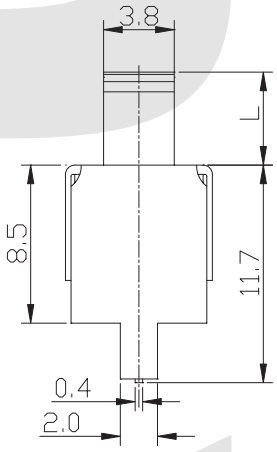

ORDER INFORMATION

KLS7-SS07 - 1 2 F 02 - X X - X

- Part Number
- Slide Switch Type
- Pole
- Throw
- Sequential No.
- Knobe Height
- Operating Force

Travelling					
C	D	E	F	G	H
1.5	2.0	2.5	3.0	3.5	4.0
I	J	K	L	N	P
4.5	5.0	5.5	6.0	7.0	8.0
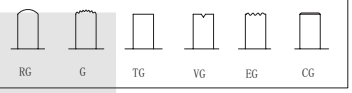
Knob Type